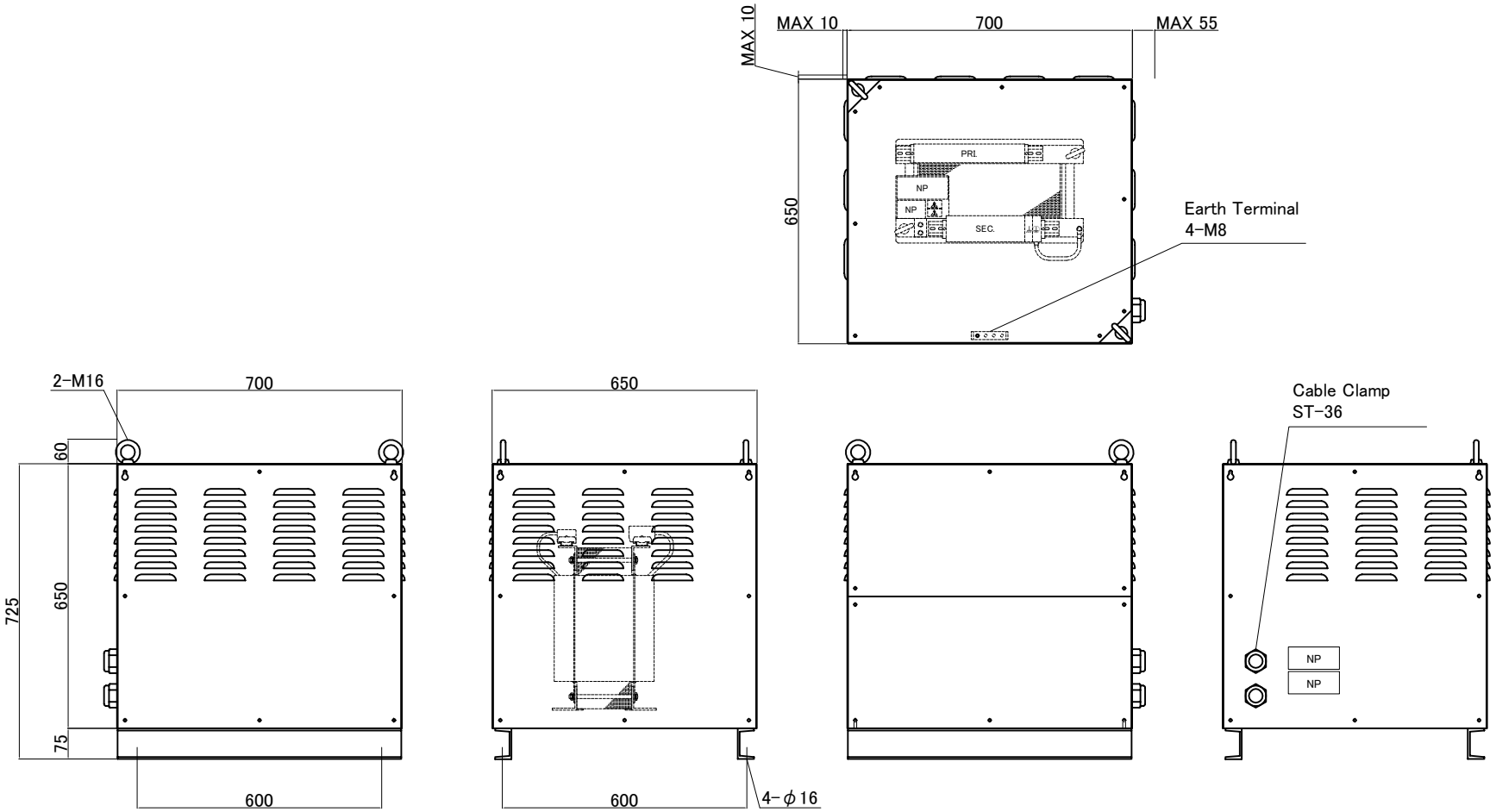

Transformer and Box Mass 245kg

XX in the model is a number from 00 to 99.

Rev. No.	Date	Content	Ver.	Designed	Designed N.Marukai	Scale	Designed Date 16.04.20	Description Transformer Box	Remarks
					Approved M.Fujikata	Unit mm	Material Iron	Model	IEH3-YDB0208S-XX3P
					今井電機株式会社 IMAI ELECTRIC CO., LTD.		Finish Painting	Dwg. No.	SYDB0208SP-V1